BRIEF INFORMATION

90 mm LED MODULE L4060

→ Provider for all 5 front light functions in LED with 2 headlamps
→ For diverse applications and the highest demands
→ Maximum design and technological freedom thanks to modular system
→ More illumination and safety with innovative LED technology

PRODUCT FEATURES

- → **Striking design:** Ring-shaped, homogeneous daytime running light/position light or direction indicator
- → **Conversion:** Existing halogen versions can be converted to LED modules (compatible installation solutions)
- → **90 mm LED upgrade:** All lighting functions available with LED technology, for maximum service life
- → **Design:** 40 x 60 mm polycarbonate and polymethylmethacrylate lenses for varying light distribution as low beam, fog light, high beam and fog light with cornering light
- → **Housing:** Sturdy die-cast aluminum housing with integrated electronics
- → **Resistant to impact from stones:** Polycarbonate cover lens
- → **Weight saving:** Lens made from lightweight yet durable polycarbonate and polymethylmethacrylate

Drive 20 times around the world without needing to replace the bulb.

- → Bulb replacement has become a thing of the past. Maintenance-free due to passive cooling
- → No moving parts are necessary (e.g. fan)
- → Lower fuel consumption and reduced CO2 emissions due to lower power consumption of max. 20 W on low beam or high beam
- → LED headlamps improve safety. The illumination is similar to daylight, considerably improving vision and ease of driving (drivers do not tire as quickly)
- → Multi-voltage (12 V, 24 V)
- → ECE and SAE type-approved

TECHNICAL DETAILS

Technical Data		
Operating voltage	Multivolt 9 – 32 V	
Functions	Low beam, high beam, fog light, daytime driving light, position light, cornering light and direction indicator	
Connection	Integrated 4-pin FEP plug; adaptation to DEUTSCH plug available , or DEUTSCH (low beam only)	
Specification*	HELLA standard N67101 1.2 Car Premium / 3.2 Caravan Premium / 4.1 Bus / 6.1 Truck / 7.2 Agro Plus	
Type approval	**ECE**	**SAE**
Low beam	ECE-R112 S01	SAE J566, FMVSS108
High beam	ECE-R112 S01	SAE J566, FMVSS108
Fog light	ECE-R19 F3, series 04	SAE J583
Daytime running light	ECE-R87	SAE J2087
Position light	ECE-R7	SAE J222
Cornering light	ECE-R119	SAE J852

* A 3A fuse from HELLA must be used for all LED headlamps. A fuse of >3A is not sufficient to safely interrupt the power supply in the event of a fault. In the case of unknown protection, an external safety switch (e.g. 8JD 743 557-021) must also always be used. If water gets in, incorrect protection can lead to damage ranging from melting to burning of the product.

Upgrade to LED

HELLA is currently the only provider that can offer you conversion to LED light technology for all 90 mm single and multifunctional modules in halogen and xenon.

Main LED light functions

Low beam

Low beam with daytime running light and position light

High beam

High beam with daytime running light and position light

High beam and direction indicator (SAE for <80")

Auxiliary LED light functions

Fog light

Fog light and cornering light

Fog light with daytime running light and position light

90 mm configurator:
www.hella.com/90mm-modules

This tool shows you the options for equipping or upgrading a vehicle with 90 mm LED modules. See images from Europe's biggest light testing facility and compare the light distribution of halogen and LED modules, in order to help you make the right choice for your application.

Technical Drawings

90 mm: L4060 low beam
Performance module mount

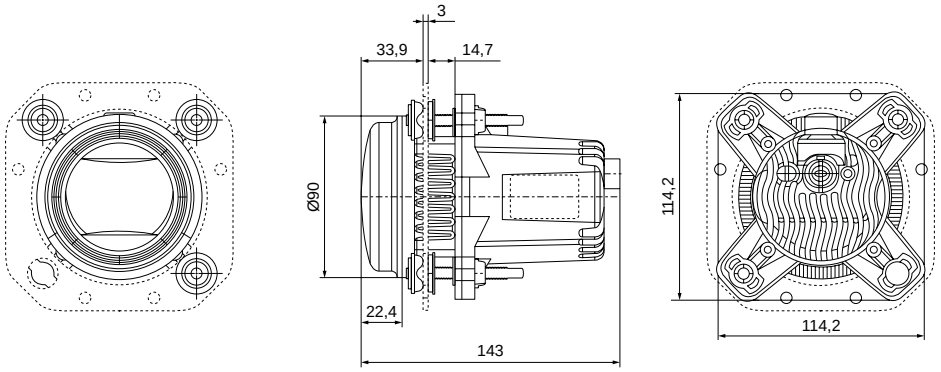

90 mm: L4060 high beam/fog light
With preassembled carrier frame

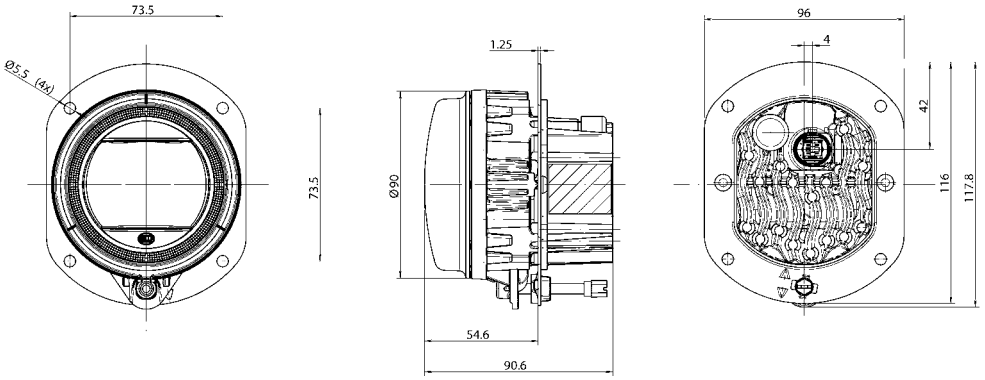

90 mm: L4060 high beam
Performance module mount

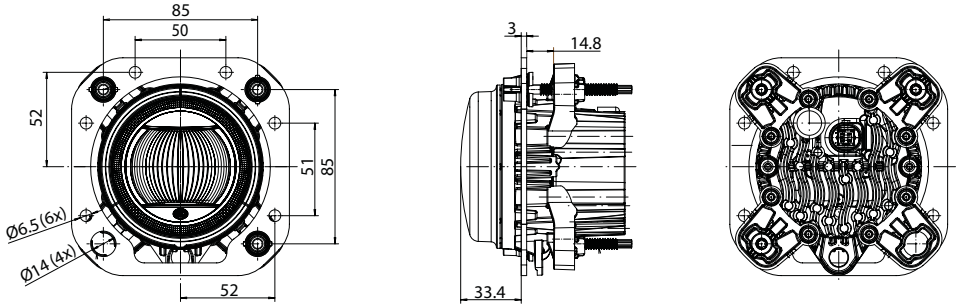

90 mm: L4060 fog light and cornering light
With preassembled carrier frame

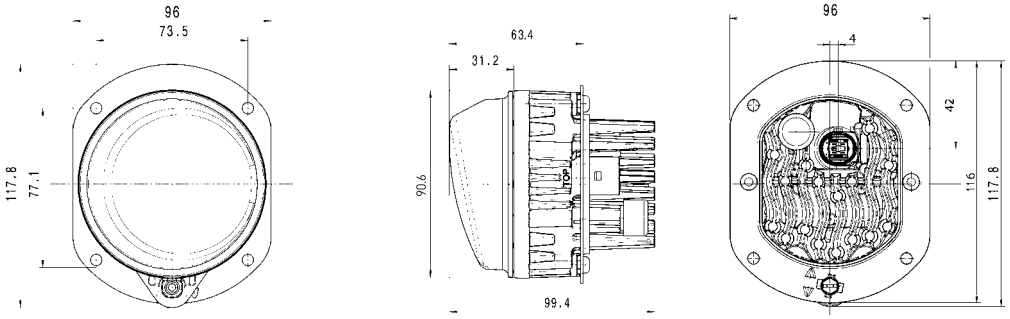

Pin assignment

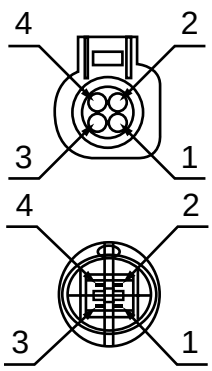

1) Central function (low beam, high beam, fog light and cornering light)

2) Position light (if available)

3) Ground

4) Daytime running light or direction indicator (if available)

Installation and thermal conditions

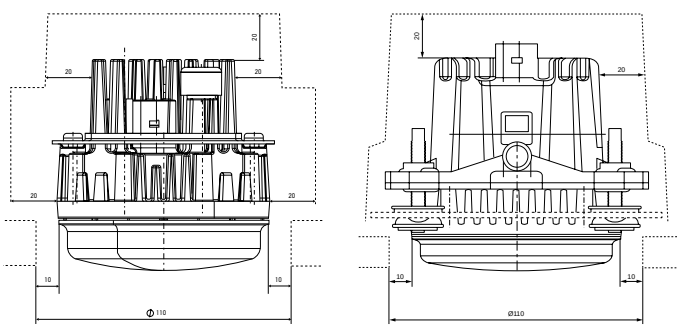

High beam

Low beam

ISOLUX DIAGRAMS

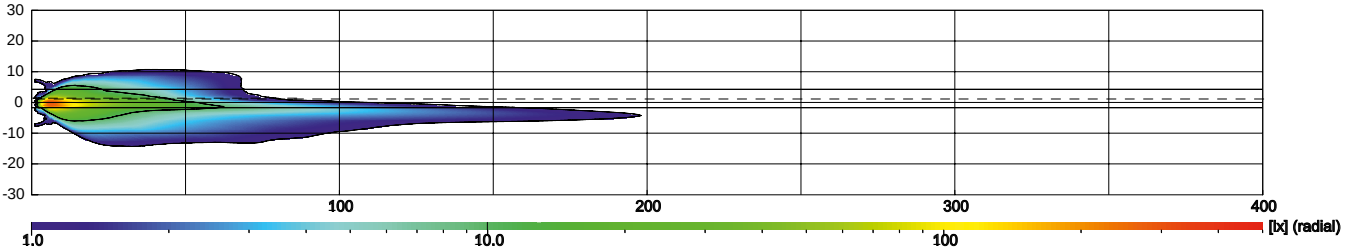

90 mm: L 4060 low beam

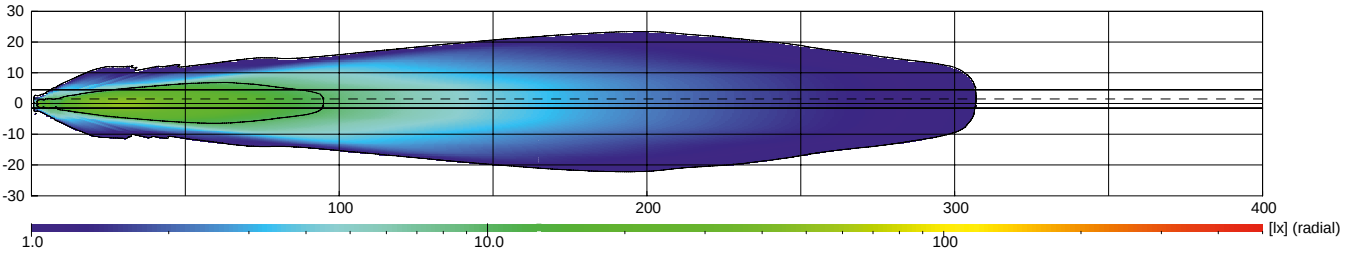

90 mm: L 4060 high beam

APPLICATION EXAMPLES

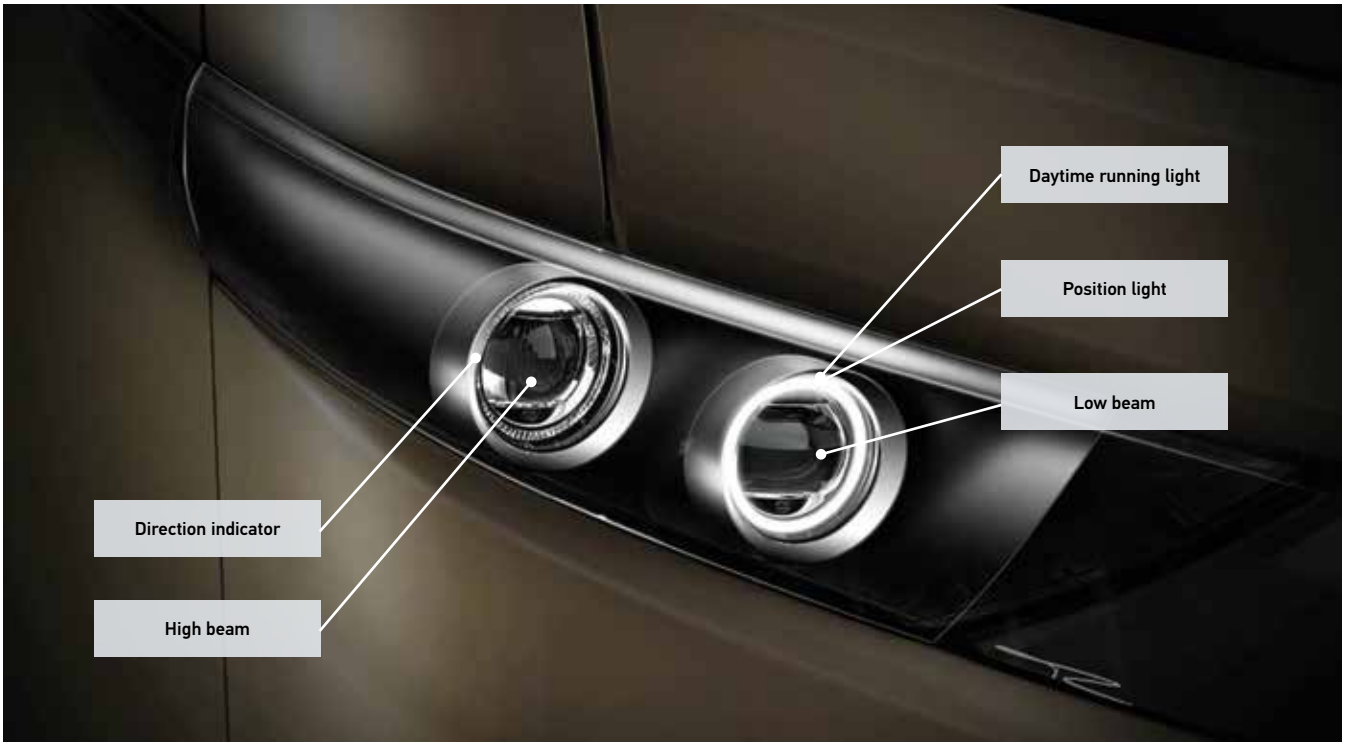

L4060 low beam

L4060 low beam and high beam

RANGE OVERVIEW

Product photos	Description	Mounting concept/ versions	Part number
	L4060 low-beam headlamp Modular headlight with 40 x 60 mm polycarbonate lens, sturdy die-cast aluminum housing, silver design cover, performance mount	ES / SAE version, DEUTSCH connector	**012488101**
	LED low-beam headlamp L4060 with daytime running and position light Modular headlight with 40 x 60 mm polycarbonate lens, sturdy die-cast aluminum housing, silver design cover, performance mount	ES / SAE version, DEUTSCH connector	**012488121**
	LED high-beam headlamp L4060 Modular headlight with 40 x 60 mm polycarbonate lens, sturdy die-cast aluminum housing, silver design cover	Preassembled carrier frame	**011988021**
		Performance mount	**011988121**
	LED high-beam headlamp L4060, with daytime running and position light Modular headlight with 40 x 60 mm polycarbonate lens, sturdy die-cast aluminum housing, silver design cover	Preassembled carrier frame	**011988031**
		Performance mount	**011988131**
	LED high-beam headlamp L4060 with direction indicator Modular headlight with 40 x 60 mm polycarbonate lens, sturdy die-cast aluminum housing, silver design cover (SAE for <80")	with pulse generator, preassembled carrier frame	**011988081**
		with pulse generator, Performance mount	**011988181**
		without pulse generator, preassembled carrier frame	**011988071**
		without pulse generator, Performance mount	**11988171**
	LED front fog lamp L4060 Modular headlight with 40 x 60 mm polycarbonate lens, sturdy die-cast aluminum housing, silver design cover	Preassembled carrier frame	**011988001**
	LED front fog lamp L4060, with daytime running light and position light Modular headlight with 40 x 60 mm polycarbonate lens, sturdy die-cast aluminum housing, silver design cover	Preassembled carrier frame	**011988011**
	L 4060 LED front fog lamp, with cornering light Modular headlight with 40 x 60 mm polycarbonate lens, sturdy die-cast aluminum housing, silver design cover	Preassembled carrier frame, right	**011988061**
		Preassembled carrier frame, left	**011988051**

ACCESSORIES

	Part number	Low beam 012 488-001/-011	Low beam, daytime running light and position light 012 488-021/-031	Low beam 012 488-101/-111	Low beam, daytime running light and position light 012 488-121/-131	Fog light 011 988-001	Fog light, daytime running light and position light 011 988-011	Fog and bend lighting 011 988-051/-061	High beam 011 988-021	High beam 011 988-121	High beam, daytime running light and position light 011 988-031	High beam, daytime running light and position light 011 988-131	High beam, direction indicator (with pulse) 011 988-081	High beam and direction indicator (with pulse) 011 988-181	High beam and direction indicator (without pulse) 011 988-071	High beam and direction indicator (without pulse) 011 988-171
Carrier frame																
Premium carrier frame (up to Truck)	**9AH 169 580-011**	XX	XX	XX	XX	–	–	–	–	XX	–	XX	–	XX	–	XX
Performance carrier frame (all classes)*	**9AH 254 228-012**	XX	XX	XX	XX	–	–	–	–	XX	–	XX	–	XX	–	XX
Surplus supply, LED FEP 4-pin plug																
Housing, 10 units	**8JA 202 231-002**	X	X	–	–	X	X	X	X	X	X	X	X	X	X	X
Blade contact, 50 units	**8KW 863 933-013**	X	X	–	–	X	X	X	X	X	X	X	X	X	X	X
Individual conductor seal 0.35 – 0.5 mm² or	**9GD 863 952-002**	X	X	–	–	X	X	X	X	X	X	X	X	X	X	X
individual conductor seal 0.75 mm², 50 units	**9GD 863 952-012**	X	X	–	–	X	X	X	X	X	X	X	X	X	X	X
Blind plug, 50 units	**9GD 863 952-002**	X	–	–	–	X	–	X	X	X	–	–	X	X	X	X
Surplus supply, LED DEUTSCH connector 4-pin (together with adapter cable, see[1], except for 012 488-1xx)																
Male connector housing, 10 units (**1 unit in set)	**8JA 201 022-042**	–	–	X	X	X	X	X	X	X	X	X	X	X	X	X
Lock/wedgelock, 10 units (**1 unit in set)	**9NB 201 024-042**	–	–	X	X	X	X	X	X	X	X	X	X	X	X	X
Contact sleeve 0.5 – 1.5 mm², 50 units (**5 units in set)	**8KW 201 025-112**	–	–	X	X	X	X	X	X	X	X	X	X	X	X	X
Blind plug, 50 units (**3 units in set)	**9NB 201 026-012**	–	–	X	–	X	–	X	X	X	–	–	X	X	X	X
Set packaging Amount, see **	**8JA 201 022-821**	–	–	X	X	X	X	X	X	X	X	X	X	X	X	X
Headlight beam throw adjustment system																
Headlamp leveling system, 12 V	**6NM 007 282-221**	X	X	X	X	–	–	–	–	–	–	–	–	–	–	–
Headlamp leveling system, 24 V	**6NM 008 299-501**	X	X	X	X	–	–	–	–	–	–	–	–	–	–	–
Bracket for right-side mounting of actuator	**8HG 138 619-007**	X	X	X	X	–	–	–	–	–	–	–	–	–	–	–
Bracket for left-side mounting of actuator	**8HG 138 620-007**	X	X	X	X	–	–	–	–	–	–	–	–	–	–	–
Mounting set for leveling actuators (bracket and articulated element)	**8HG 183 586-001**	X	X	X	X	–	–	–	–	–	–	–	–	–	–	–
Headlight cleaning systems																
SRA set with fixed nozzles, 12 V, 4 nozzles	**8WS 008 549-001**	XX	XX	XX	XX	–	–	–	–	–	–	–	–	–	–	–
SRA set with telescoping single nozzles, 12 V, 2 single nozzles	**8WT 008 549-101**	XX	XX	XX	XX	–	–	–	–	–	–	–	–	–	–	–
SRA set with telescoping double nozzles, 12 V, 2 double nozzles	**8WT 008 549-201**	XX	XX	XX	XX	–	–	–	–	–	–	–	–	–	–	–
SRA set with fixed nozzles, 24 V, 4 nozzles	**8WS 008 549-501**	XX	XX	XX	XX	–	–	–	–	–	–	–	–	–	–	–
SRA set with telescoping single nozzles, 24 V, 2 single nozzles	**8WT 008 549-601**	XX	XX	XX	XX	–	–	–	–	–	–	–	–	–	–	–
SRA set with telescoping single nozzles, 24 V, 2 double nozzles	**8WT 008 549-701**	XX	XX	XX	XX	–	–	–	–	–	–	–	–	–	–	–
Bend lighting accessories																
Connecting cable for LED module, bend lighting control unit, 1 unit	**8KB 163 160-811**	–	–	–	–	–	–	XX	–	–	–	–	–	–	–	–
Bend lighting control unit, 24 units	**5DF 009 244-007**	–	–	–	–	–	–	XX	–	–	–	–	–	–	–	–
Adapter cable																
[1] Adapter from FEP connector to Deutsch connector (4-pin), 1 unit	**8KA 202 117-001**	XX	XX	–	–	XX	XX	XX	XX	XX	XX	XX	XX	XX	XX	XX
Adapter from FEP connector to Performance module series or DynaView (009 295), 1 unit	**8KA 202 117-011**	XX	–	–	–	–	–	–	XX	XX	–	–	–	–	–	–
Other accessories (only if the vehicle was registered i.a.w. ECE-R48, series 05. As of ECE-R48, series 06, supplement 03, no more mandatory accessories)																
Function monitoring device 12 V, 1 unit	**5DS 011 630-001**	X	X	X	X	–	–	–	–	–	–	–	–	–	–	–
Function monitoring device 24 V, 1 unit	**5DS 011 630-011**	X	X	X	X	–	–	–	–	–	–	–	–	–	–	–

X Accessory for proper connection
XX Optional accessories
* Still in development for AgroPlus low beam modules

© HELLA KGaA Hueck & Co., Lippstadt J00960/05.15 Subject to technical and price modifications.