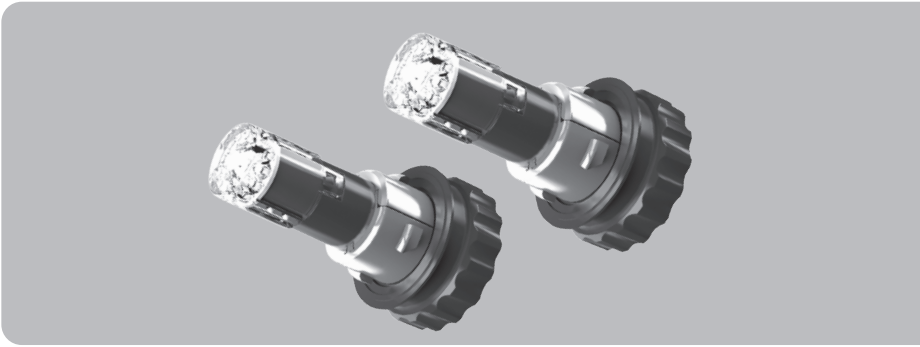

460 808-05 /11.25

MOUNTING INSTRUCTIONS
HELLA ACE - ACTIVE CONCEALED EMERGENCY LIGHT-HEAD

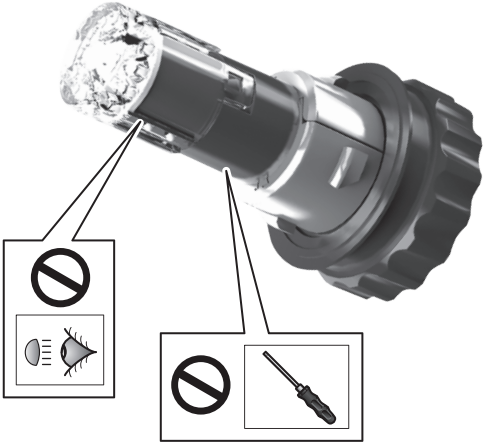

EN

PRODUCT LIABILITY

- National mounting, fitting and operating regulations must be heeded and kept.
- Please read all the instructions and safety notes included before using the device.
- We reserve the right to make technical and optical modifications within the course of product improvement.
- Only use original spare parts or spare parts approved by HELLA.
- If you have any questions or problems with the installation, please contact HELLA Customer Services, a wholesaler or your garage.
- Further information is available on our website (www.hella.com/techworld)

EN Subject to alteration without notice

Explanation symbols

EN Correct

EN Incorrect

EN Location / Position Arrow

EN Movement Arrow

EN Warning

EN Warning

EN Disconnect

EN Connect

EN Look/See

EN Worklight

Scope of delivery

a) LED lighthead
b) LED indicator control unit & Bulb socket connector
c) 8' synchronization/program cable
d) Rubber gasket (G1 Ø31mm, G2 Ø42mm)
e) Vehicle specific adapter bezels (not included /separate purchase)

Mounting

359 118 101
359 118 111
359 118 121
359 118 131
359 118 141
359 118 151

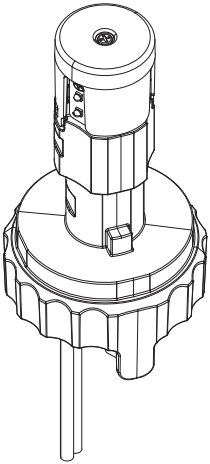

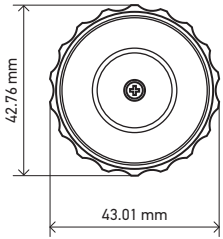

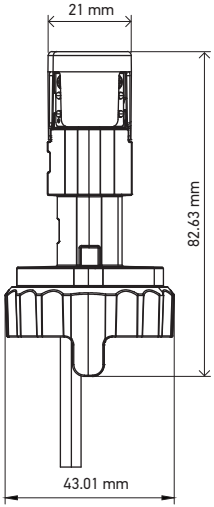

Warning options

Color 1	Red	
Color 2	Amber	
Color 3	White	
Color 4	Blue	
Color 1 & Color 4	Red	Blue
Color 2 & Color 3	Amber	White
Color 1 & Color 3	Red	White
Color 3 & Color 4	Blue	White

Before starting make sure the installation technician and operator reads this manual completely to avoid serious injury or damage during installation.

- Do not install this product unless you are an installer with professional understanding of automotive electronics, systems and procedures.
- If drilling holes is necessary during installation be sure the area is free from all other vehicle equipment to avoid damage while drilling. Smooth any rough edges after drilling and remove all metal remains. Grommets should be installed into all wire passing holes.
- Do not install equipment or wiring in the air bag deployment area. Anything installed in the air bag deployment area can cause serious personal injury or death. The Installer assumes full responsibility in determining the correct mounting location in keeping with the highest safety standards to all passengers inside the vehicle.
- When pairing a remote device, make sure to install the control in an area that is safe for the vehicle and the control under all driving conditions.
- Avoid prolonged direct eye contact with the LED's. Momentary blindness and/or eye damage could result.
- Do not use cleaning chemicals on the lens to avoid premature lens cracking and discoloration.
- Inspect the working condition of this product on a regular basis to ensure proper performance.
- Incorrect installation of parts and/or hardware will affect the product warranty.

Safety Information

Before beginning installation, please read all safety instructions carefully. It is the responsibility of the installation technician to make sure that the installation and operation of this product will not interfere with or compromise the operation or efficiency of any vehicle equipment! Failure to follow these guidelines may result in injury, equipment damage, or voiding of warranty.

This manual provides step-by-step instructions for the safe and effective installation of HELLA A.C.E.. It is intended for qualified personnel familiar with standard installation practices and safety procedures.

This product contains high-intensity LEDs or a combination of these lights. Do not stare directly into these lights. Momentary blindness and/or eye damage could result.

Use of chemicals to clean the lens could result in premature lens cracking and discoloration. Lenses in this condition have significantly reduced effectiveness and should be replaced immediately. Emergency vehicle warning devices should be tested daily to ensure that they operate properly.

Warnings to Users:
HELLA's emergency vehicle warning devices are intended to alert other operators and pedestrians to the presence and operation of emergency vehicles and personnel. However, the use of this or any other HELLA emergency warning device does not guarantee that you will have the right-of-way or that other drivers and pedestrians will properly heed an emergency warning signal. Never assume you have the right-of-way. It is your responsibility to proceed safely before entering an intersection, driving against traffic, responding at a high rate of speed or walking on or around traffic lanes. It is the user's responsibility to understand and obey all laws regarding emergency warning devices.

Failure to adhere to the following precautions and instructions may result in severe product or vehicle damage and could cause serious injury to occupants. Any misuse or operation outside the specified parameters will immediately void the warranty (3 Years).

HELLA ACE Assembly and Product Installation

HELLA ACE ASSEMBLY

Step 1: Take adapter "1" and place it over the raised rectangular alignment guide of the LED light head.
Step 2: Take adapter "2" and attach it to adapter "1". Make sure the adapters are locked/seated properly around the HELLA ACE base.
Step 3: Pull the rubber gasket over the LED light head all the way down until the gasket sits flat against the base to create a weather resistant seal. Please note, there are two sizes provided. Install the one, that properly fits over the adapter installed in the step above.
Step 4: Attach the 8' sync/program cable to the female inline connector of the LED light head.
Step 5: Connect the vehicle integration cable to the white male inline connector

IMPORTANT: Do not install the HELLA ACE light head without the vehicle integration cable.

STEP 1

STEP 2

STEP 3

Slide gasket onto light head unit it is flat against the base to create a weather resistant seal.

STEP 4

STEP 5

HELLA ACE Assembly and Product Installation

VEHICLE INSTALL

Step 1: Remove the bulb socket out of the head-/taillight chamber by twisting it counterclockwise.
Step 2: Unplug the original Halogen/Incandescing bulb from the OEM socket
Step 3: Take the connector of the vehicle integration cable (B) and insert it into the OEM bulb socket base.
Step 4: Affix the module/box on the integration cable to the vehicles body or any other metal surface.

CAUTION: During operation the module will get very hot (up to 80°C/176°F). Keep flammable materials in a safe distance (1-2" minimum) to prevent damage of other components Step 5: Take the pre-assembled HELLA ACE and twist it clockwise into the head/taillight opening for the OEM bulb position. Make sure that the Light head is seated properly to create a tight seal.

IMPORTANT: HELLA ACE Resistor box has been designed for heat dissipation and a proper performance of the Hideaway. For a maximumperformance and avoid any malfunction, the resistor box needs to be installed in a metallic surface. It cannot remain hanging off the vehicle or tied to other wires. IMPORTANT: Some applications may present compatibility challenges with our universal T20 connector. When this occurs, direct installation via open wires—after removing the connector—is a viable solution. The HELLA ACE remains fully functional and reliable in this configuration.

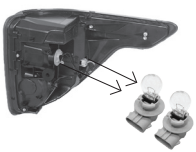

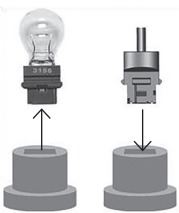

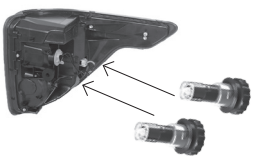

HELLA ACE Flash Patterns

# FP	Single-Color	Multi-Color
1-Default	Quad 150 Hz, Phase 1	Quad 150 Hz, Phase 1
2	Quad 150 Hz, Phase 2	Quad 150 Hz, Phase 2
3	Single 75 Hz, Phase 1	Single 75 Hz, Phase 1
4	Single 75 Hz, Phase 2	Single 75 Hz, Phase 2
5	Single 120 Hz, Phase 1	Single 120 Hz, Phase 1
6	Single 120 Hz, Phase 2	Single 120 Hz, Phase 2
7	Single 375 Hz, Phase 1	Single 375 Hz, Phase 1
8	Single 375 Hz, Phase 2	Single 375 Hz, Phase 2
9	Double 75 Hz, Phase 1	Double 75 Hz, Phase 1
10	Double 75 Hz, Phase 2	Double 75 Hz, Phase 2
11	Double 120 Hz, Phase 1	Double 120 Hz, Phase 1
12	Double 120 Hz, Phase 2	Double 120 Hz, Phase 2
13	Triple 75 Hz, Phase 1	Triple 75 Hz, Phase 1
14	Triple 75 Hz, Phase 2	Triple 75 Hz, Phase 2
15	Quad 75 Hz, Phase 1	Quad 75 Hz, Phase 1
16	Quad 75 Hz, Phase 2	Quad 75 Hz, Phase 2
17*	2x Double Flash, 2x Quad Flash	OFF
18*	4x Single Flash, 2x Triple Flash	
19*	Modul Flash sim.	
20*	Steady burn	

* Two units running on Single-Color Flash patterns 17 – 20 can't get synchronized.

GENERAL INFORMATION:
When the driver applies the brake or activates the turn indicator, the STOP & TURN function will always override the warning function. As soon as the driver releases the brake/turn indicator, the lighthead returns to flash mode.

WIRE FUNCTION
8' sync/program cable: Use this cable to connect the light head to the customer provided 12V ON/OFF switch 12V siren control system.
• RED wire: Flash/Warning function mode – Connect to POSITIVE (+) 12V
• BLUE wire is a multi-function programming cable:
– Color selection: Apply to POSITIVE (+) 12V
– Flash pattern selection: Apply to GROUND (-)

Synchronization: Connect the YELLOW wires among all HELLA ACE lightheads that need to be synchronized. Phase 1: simultaneous flash, Phase 2: alternate flash. To program flash patterns or choose between the colors the lighthead must be switched on.

Programming		
To select	**Color options**	**Flash Pattern**
Blue Wire	Apply to POSITIVE (+)	Apply to GROUND (-)
0 -1 sec.	Next color/pattern	
1 -3 sec.	Previous color/pattern	
3 - 5 sec.	Back to Default color/pattern #1	
> 5 sec.	Off	

ATTENTION: If your HELLA ACE does not light up, unplug the bulb socket connector invert it 180° and reinsert into the bulb socket again. (Reason: Halogen bulbs can be inserted both ways, LED devices just one way. The lighthead is protected against reverse polarity. → No worries, inserting it the wrong way will not harm the lighthead electronics).

LED LIGHTHEAD:
A.C.E. receives the POSITIVE (+) and GROUND (-) source through the OEM bulb socket plug. No extra wiring required. This lighthead works for 2-function bulbs (F1: Tail/Park & F2: Stop/Turn) and 1-function bulbs (Stop, Tail, Turn or Reverse).

NOTE: To insert the vehicle integration connector into a 1-function bulb socket, detach Pin #2 using a wire cutter or a similar tool. (see figure 3)

INSERT VEHICLE INTEGRATION CONNECTOR INTO A 1-FUNCTION BULB SOCKET
(Figure 3)

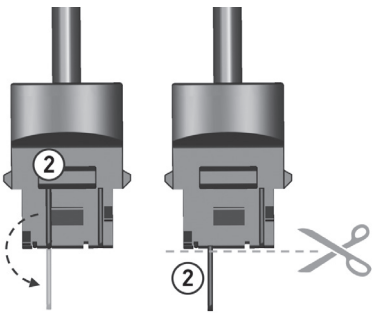

Causes of Failure in Automotive LED lights (with Flash Function)

Outlined below are the most frequently encountered failures for LED products with flash function.

1. Electrical Causes

Cause: LED Chip Degradation
Description: Over time, the luminous efficiency of the LED chip decreases, accelerated by high operating temperatures.
Symptoms: Gradual brightness drop, color shift (e.g., white → yellowish).
Classification: Field / Environment

Cause: Power Surge / Overvoltage
Description: Caused by alternator spikes, battery replacement, or jump-starting.
Symptoms: Several LEDs fail simultaneously or complete lamp blackout.
Classification: Design / Environment

2. Mechanical / Environmental Causes

Cause: Water/Dust Ingress
Description: Sealant defects or hardened gaskets allow moisture or dust inside.
Symptoms: Fogging inside the lens, short circuits
Classification: Design / Manufacturing / Environment.

Cause: Vibration / Impact Damage
Description: Road vibration or mechanical shocks (e.g., car wash).
Symptoms: Intermittent flicker in certain sections
Classification: Environment / Field

3. Control / Firmware-Related Causes (Especially relevant for lamps with flash functions)

Cause: MCU Malfunction
Description: Microcontroller controlling flash patterns malfunctions due to ESD or unstable power supply
Symptoms: Unable to enter flash mode, incorrect flash speed/ pattern
Classification: Design / Quality / Environment

IMPORTANT: We strongly recommend a thorough review of all potential failure points detailed in our Best Practices Catalog to support optimal application performance.

FOR MORE INFORMATION:
HELLA ACE BEST PRACTICES

Technical Data

Supply voltage: 12V
Power consumption: 25W
Light color: Amber - / White - / Red - / Blue -
Operating temperature: -55°C to +125°C
Approvals/certificates: SAE J595 Class (2) / EMC Class 3
Weight: 69g

HELLA Automotive Sales, Inc.
611 Highway 74 S, Suite 102
Peachtree City, GA 30269 USA
Tel. 1-877-224-3552

www.hella.com/us/

460 808-05 11.25
Printed in USA